DoersWindow MANUFACTURING
4901 Oak Fair Blvd., Tampa, FL 33610

TrustSeries Fixed Window

"NON-IMPACT"

GENERAL NOTES

1. This product anchoring drawing has been evaluated and is in compliance with the 5th Edition (2014) Florida Building Code (FBC) excluding the "High Velocity Hurricane Zone" (HVHZ). See the Certification Agency Certificate for sizes, specifications & ratings.
2. Product anchors shall be as listed and spaced as shown on details. Anchor embedment to base material shall be beyond wall dressing or stucco.
3. When used in areas requiring wind borne debris protection this product is required to be protected with an impact resistant covering that complies with Section 1609.1.2 of the FBC.
4. For 2x stud framing construction, anchoring of these units shall be the same as that shown for 2x buck masonry construction.
5. Site conditions that deviate from the details of this drawing require further engineering analysis by a licensed engineer or registered architect.

TABLE OF CONTENTS

SHEET#	DESCRIPTION
1	Typical elevations, design pressures & general notes
2	Vertical & horizontal cross sections
3	Vertical & horizontal cross sections
4	Buck & frame anchoring
5	Bill of materials, glazing details and components

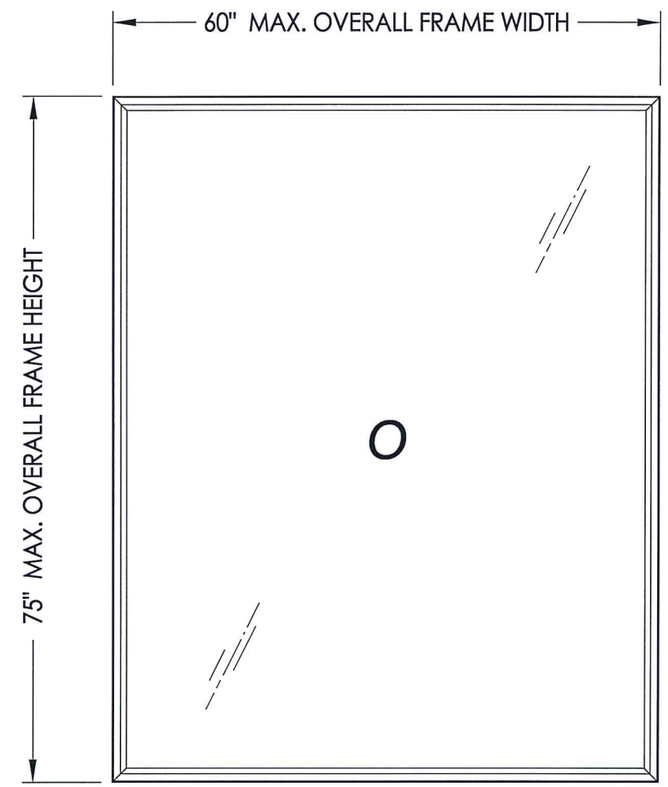

60.0" X 75.0" FRAME SHOWN

NOTE: VERTICAL ORIENTATION SHOWN (HORIZONTAL ORIENTATION ALSO APPROVED)

OVERALL FRAME DIMENSION	OVERALL DAY LIGHT DIMENSION	GLASS TYPE	DESIGN PRESSURE (PSF)	
			POS.	NEG.
60.0" X 75.0"	56.91" X 71.91"	G1	+40.0	-40.0
60.0" X 60.0"	56.91" X 56.91"	G2	+50.0	-50.0

L. F. SCHMIDT LICENSE No. 43409 STATE OF FLORIDA PROFESSIONAL ENGINEER

Documents Prepared By:
Lyndon F. Schmidt
P.E. No. 43409

RW BUILDING CONSULTANTS, INC.
P.O. Box 230, Valrico, FL 33595
Phone No.: 813.659.9197
FBPE C.A. No. 9813

PRODUCT: DOERS

PART OR ASSEMBLY: TYPICAL ELEVATION, DESIGN PRESSURES & GENERAL NOTES

NO.	DATE	REVISIONS	BY
1	6/25/15	UPDATE TO 5TH ED. (2014) FBC	LFS

DATE: 12/22/11
SCALE: N.T.S.
DWG. BY: KV
CHK. BY: LFS
DRAWING NO.: FL-15099.4
SHEET 1 OF 5

© 2011 R.W. BUILDING CONSULTANTS INC.

R:\Clients\Doers PERMANENT\Florida Product Approvals\FL-15099 Windows - Fixed\C - Drawings\FL-15099 (2014)\FL-15099.1-4.dwg, FL-15099.4

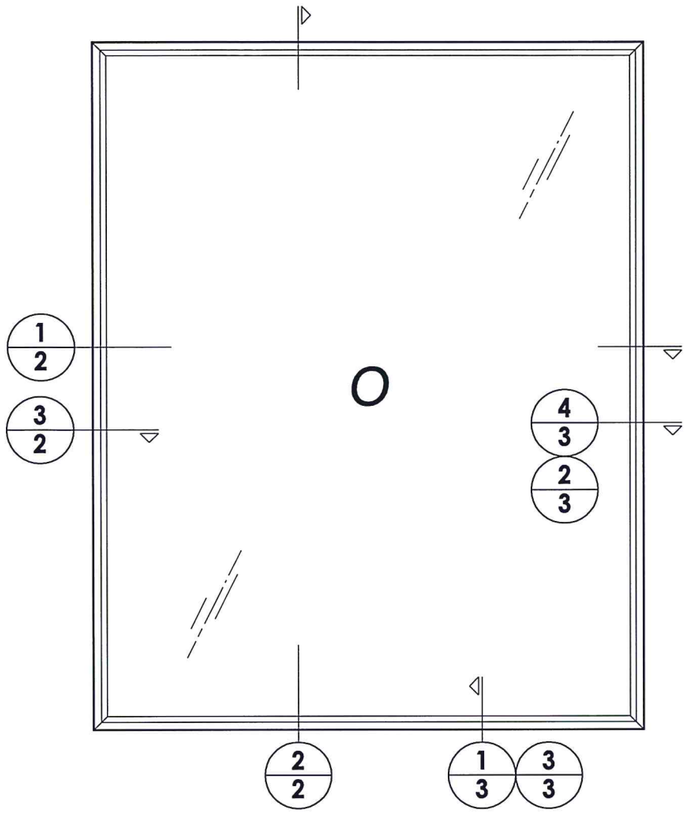

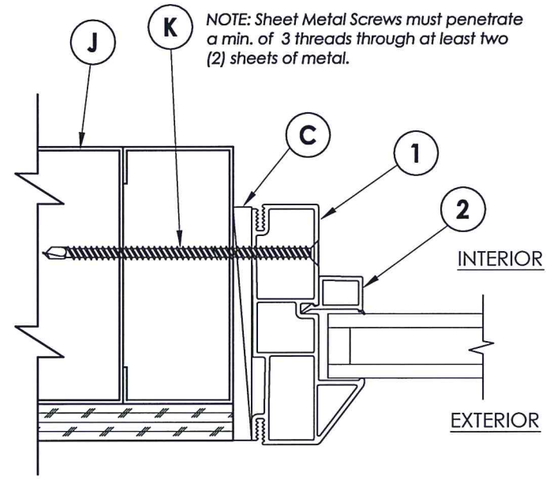

3/2 HORIZONTAL CROSS SECTION
Shown w/ Steel Stud Framing Option

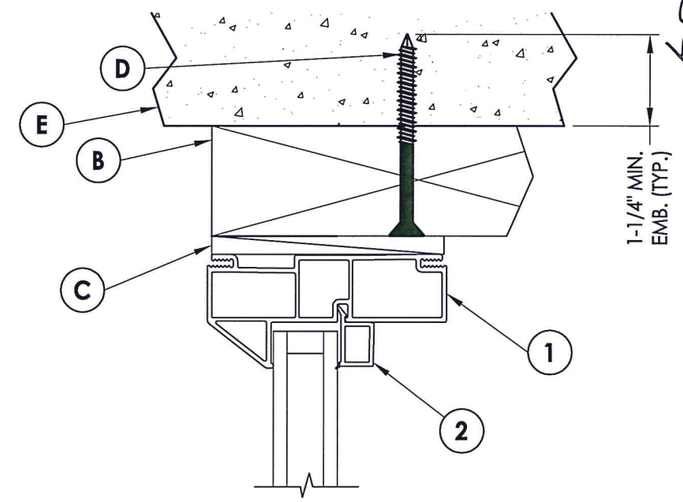

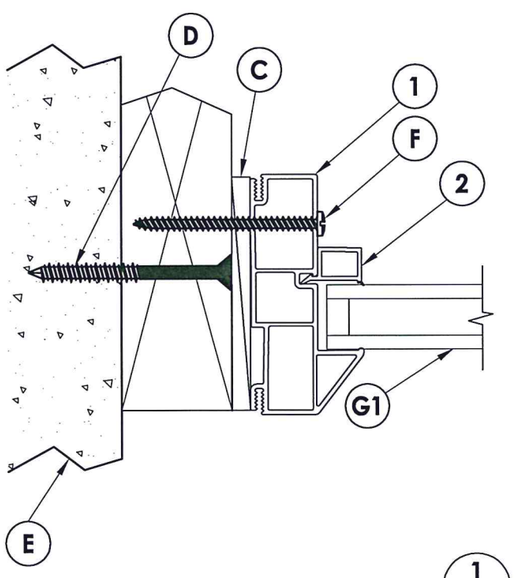

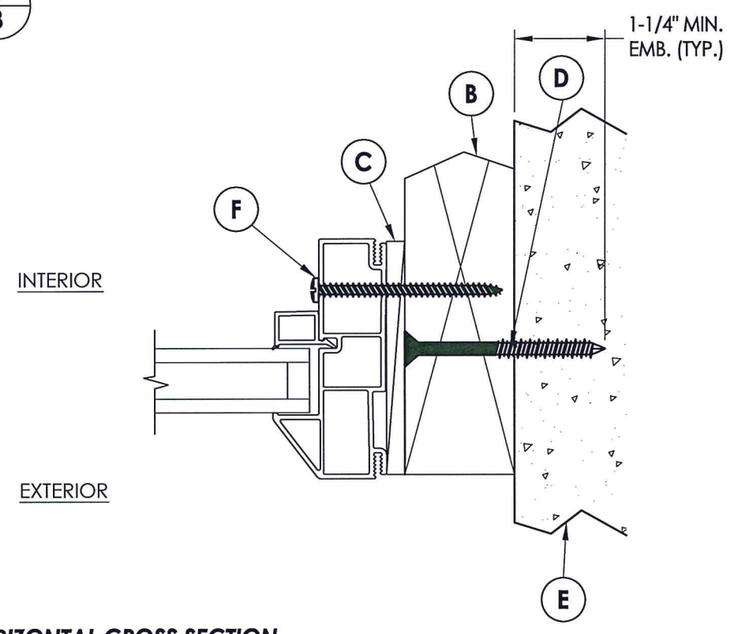

1/2 HORIZONTAL CROSS SECTION
2X Buck Masonry Construction

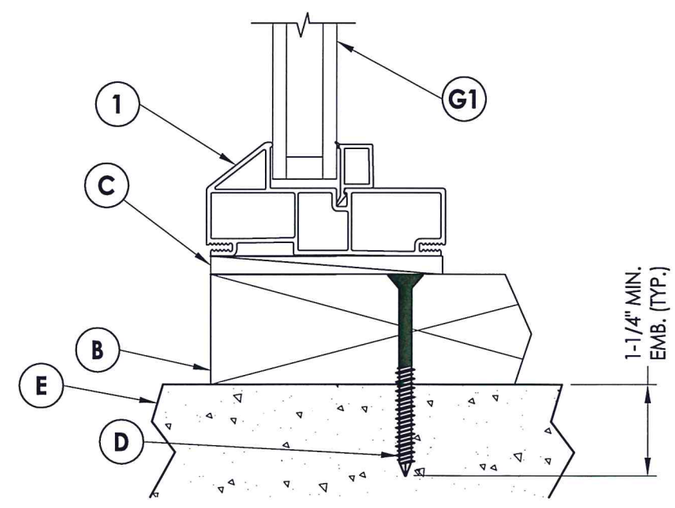

2/2 VERTICAL CROSS SECTION
2X Buck Masonry Construction

STATE OF FLORIDA
PROFESSIONAL ENGINEER
LYNDON F. SCHMIDT
LICENSE
No. 43409

Documents Prepared By:
Lyndon F. Schmidt
P.E. No. 43409

R.W. BUILDING CONSULTANTS, INC.
P.O. Box 230, Valrico, FL 33595
Phone No.: 813.659.9197
FBPE C.A. No. 9813

PRODUCT: DOERS

PART OR ASSEMBLY: VERTICAL & HORIZONTAL CROSS SECTIONS

NO.	DATE	REVISIONS	BY
1	6/25/15	UPDATE TO 5TH ED. (2014) FBC	LFS

DATE: 12/22/11
SCALE: N.T.S.
DWG. BY: KV
CHK. BY: LFS
DRAWING NO.: FL-15099.4
SHEET 2 OF 5

© 2011 R.W. BUILDING CONSULTANTS INC.

R:\Clients\Doers PERMANENT\Florida Product Approvals\FL-15099 Windows - Fixed\C - Drawings\FL-15099 (2014)\FL-15099.1-4.dwg, 24

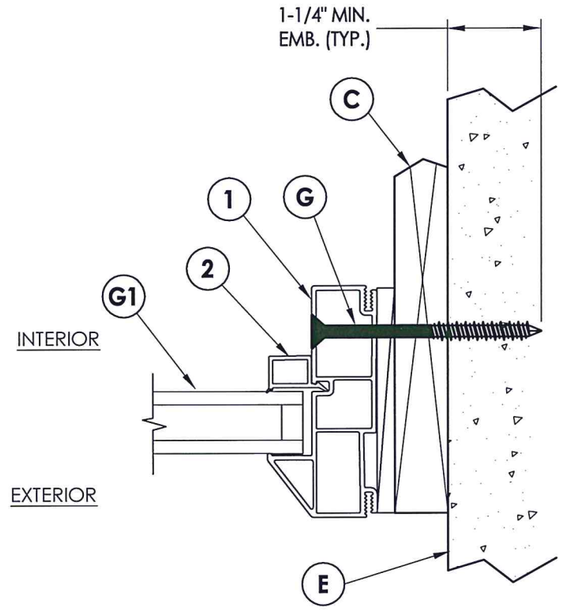

2/3 HORIZONTAL CROSS SECTION
Shown w/1X sub-buck

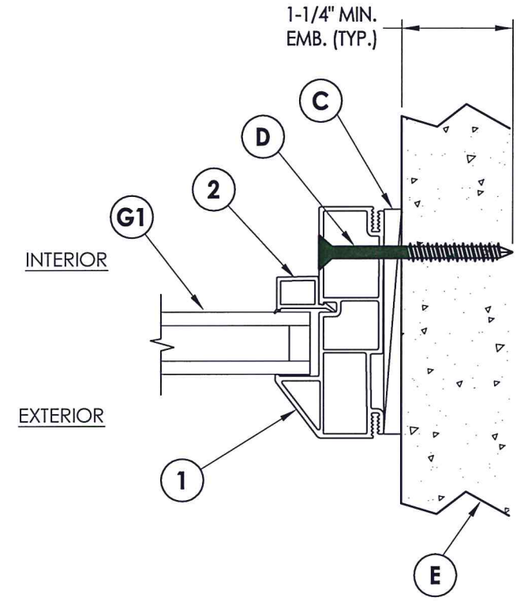

4/3 HORIZONTAL CROSS SECTION
Shown Direct to Masonry

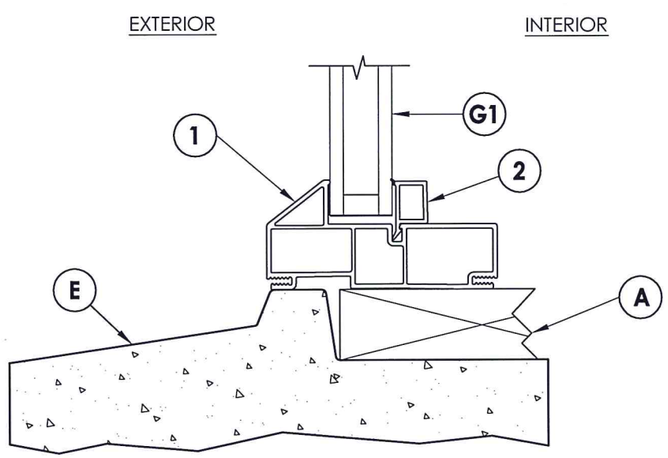

1/3 VERTICAL CROSS SECTION
Optional masonry sill

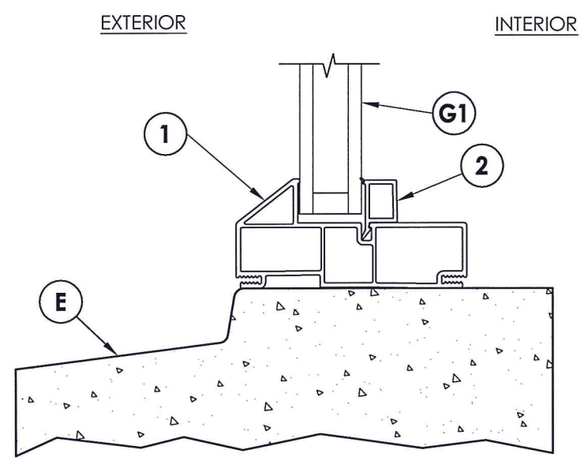

3/3 VERTICAL CROSS SECTION
Optional masonry sill

L. F. SCHMIDT
LICENSE
No. 43409
STATE OF FLORIDA
PROFESSIONAL ENGINEER

6-26-15

Documents Prepared By:
Lyndon F. Schmidt
P.E. No. 43409

RW BUILDING CONSULTANTS, INC.
P.O. Box 230, Valrico, FL 33595
Phone No.: 813.659.9197
FBPE C.A. No. 9813

PRODUCT: DOERS

PART OR ASSEMBLY: VERTICAL & HORIZONTAL CROSS SECTIONS

REVISIONS

NO.	DATE		BY
1	6/25/15	UPDATE TO 5TH ED. (2014) FBC	LFS

DATE: 12/22/11
SCALE: N.T.S.
DWG. BY: KV
CHK. BY: LFS
DRAWING NO.: FL-15099.4
SHEET 3 OF 5

© 2011 R.W. BUILDING CONSULTANTS INC.

R:\Clients\Doers PERMANENT\Florida Product Approvals\FL-15099 Windows - Fixed\C - Drawings\FL-15099 (2014)\FL-15099.1-4.dwg, 3.4

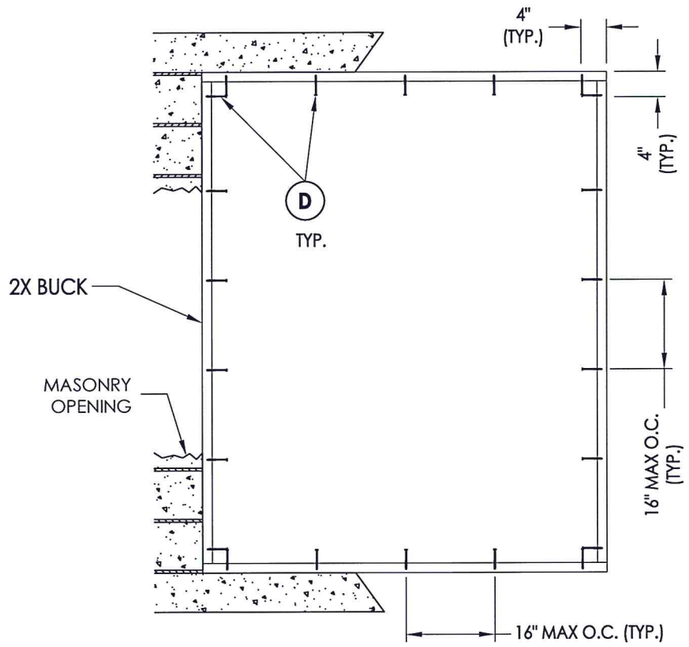

BUCK ANCHORING

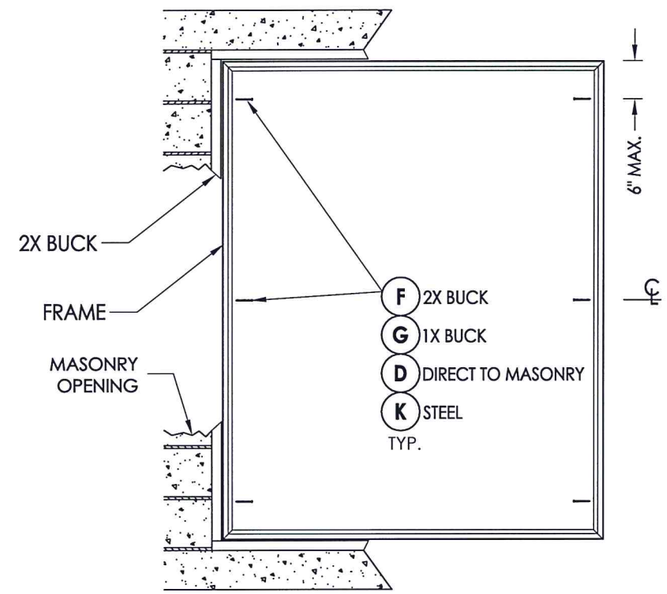

FRAME ANCHORING

CONCRETE ANCHOR NOTES:

1. *Concrete anchor locations at the corners may be adjusted to maintain the min. edge distance to mortar joints.*
2. *Concrete anchor locations noted as "MAX. ON CENTER" must be adjusted to maintain the min. edge distance to mortar joints, additional concrete anchors may be required to ensure the "MAX. ON CENTER" dimension are not exceeded.*
3. *Concrete anchor table:*

ANCHOR TYPE	ANCHOR SIZE	MIN. EMBEDMENT	MIN. CLEARANCE TO MASONRY EDGE	MIN. CLEARANCE TO ADJACENT ANCHOR
ITW TAPCON®	1/4"	1-1/4"	2"	4"
ELCO ULTRACON®	1/4"	1-1/4"	1"	4"

WOOD SCREW INSTALLATION NOTES:

1. *Maintain a minimum 5/8" edge distance, 1" end distance, & 1" o.c. spacing of wood screws to prevent the splitting of wood.*

L. F. SCHMIDT LICENSE No. 43409 STATE OF FLORIDA PROFESSIONAL ENGINEER
6-26-15

Documents Prepared By:
Lyndon F. Schmidt
P.E. No. 43409

BUILDING CONSULTANTS, INC.
P.O. Box 230, Valrico, FL 33595
Phone No.: 813.659.9197
FBPE C.A. No. 9813

PRODUCT: DOERS

PART OR ASSEMBLY: BUCK & FRAME ANCHORING

NO.	DATE	REVISIONS	BY
1	6/25/15	UPDATE TO 5TH ED. (2014) FBC	LFS

DATE: 12/22/11
SCALE: N.T.S.
DWG. BY: KV
CHK. BY: LFS
DRAWING NO.: FL-15099.4
SHEET 4 OF 5

© 2011 R.W. BUILDING CONSULTANTS INC.

R:\Clients\Doers PERMANENT\Florida Product Approvals\FL-15099 Windows - Fixed\C - Drawings\FL-15099 (2014)\FL-15099.1-4.dwg, 4.4

BILL OF MATERIALS

ITEM #	DESCRIPTION	MATERIAL
A	1X BUCK (SG >= 0.42)	STEEL
B	2X BUCK (SG >= 0.42)	WOOD
C	1/4" MAX. SHIM SPACE	-
D	1/4" X 2-3/4" PFH ELCO OR ITW CONCRETE SCREW	STEEL
E	MASONRY - 3,000 PSI MIN. CONCRETE CONFORMING TO ACI 301 OR HOLLOW BLOCK CONFORMING TO ASTM C90	CONCRETE
F	#8 X 2-1/2" PPH SMS (1-1/4" MIN. EMBEDMENT)	STEEL
G	1/4" X 3-1/4" PFH ELCO OR ITW CONCRETE SCREW	STEEL
J	STEEL STUD Min. Thk .033" (ASTM A653 GRADE 33 Fy=33 ksi min., Fu=45 ksi min.)	STEEL
K	#10 PPH SELF-DRILLING SMS	STEEL
1	EXTRUDED VINYL FRAME *	RIGID PVC
2	EXTRUDED VINYL GLAZING BEAD *	RIGID PVC
3	GLASS SETTING BLOCK	-
4	GLAZING SPACER	STEEL
5	GLAZING SEALANT	SILICONE

* THE APPROVED WHITE RIGID PVC EXTERIOR EXTRUSIONS FOR WINDOWS ARE TO BE PRODUCED BY EXTRUDERS LICENSEES IN "AAMA CERTIFICATION PROGRAMS FOR RIGID PVC EXTRUSIONS".

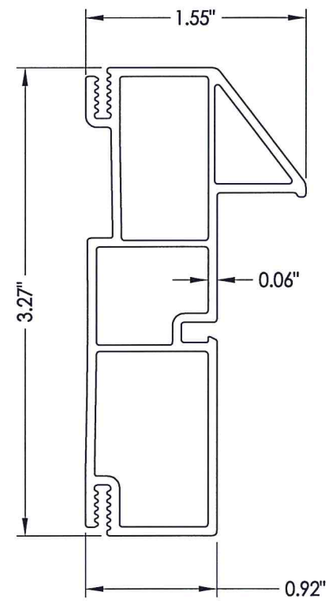

1 FRAME
730F

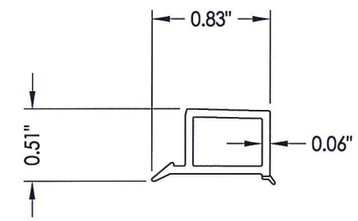

2 GLAZING BEAD
766A

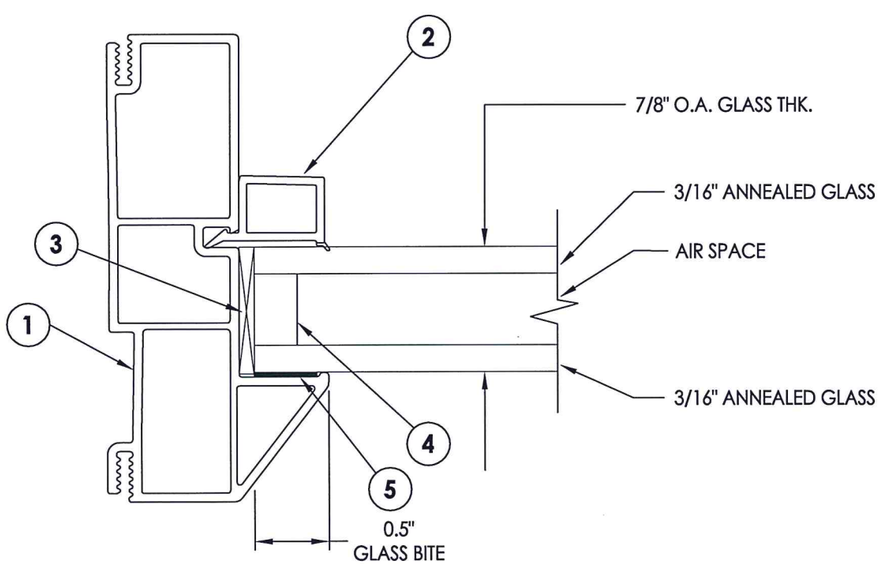

G1 GLAZING DETAIL

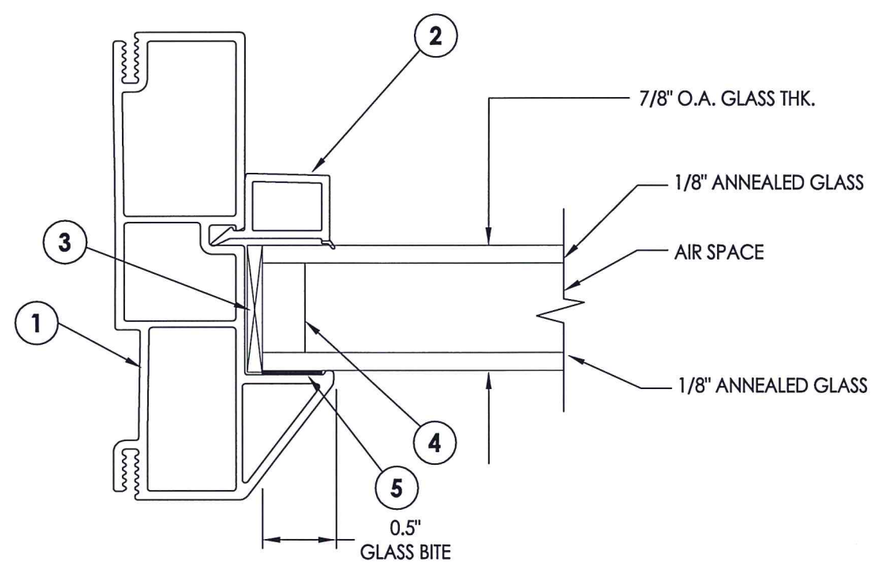

G2 GLAZING DETAIL

L. F. SCHMIDT LICENSE No. 43409 PROFESSIONAL ENGINEER STATE OF FLORIDA

6-26-15

Documents Prepared By:
Lyndon F. Schmidt
P.E. No. 43409

BUILDING CONSULTANTS, INC.
P.O. Box 230, Valrico, FL 33595
Phone No.: 813.659.9197
FBPE C.A. No. 9813

PRODUCT: DOERS

PART OR ASSEMBLY: BILL OF MATERIALS, GLAZING DETAILS & COMPONENTS

NO.	DATE	REVISIONS	BY
1	6/25/15	UPDATE TO 5TH ED. (2014) FBC	LFS

DATE: 12/22/11
SCALE: N.T.S.
DWG. BY: KV
CHK. BY: LFS
DRAWING NO.: FL-15099.4
SHEET 5 OF 5

© 2011 R.W. BUILDING CONSULTANTS INC.

R:\Clients\Doers PERMANENT\Florida Product Approvals\FL-15099 Windows - Fixed\C - Drawings\FL-15099 (2014)\FL-15099.1-4.dwg, 5.4